51 mm (2") Pump Maximum Flow Rate: 575 lpm (152 gpm)

PS8 HS METAL

PUMP DATA

Specifications:

Ship Weight..... 49 kg (109 lb)
Air Inlet .....19 mm (3/4")
Inlet.....51 mm (2")
Outlet.....51 mm (2")

DIMENSIONAL DRAWING

PS8 Saniflo™ HS Fixed Stand

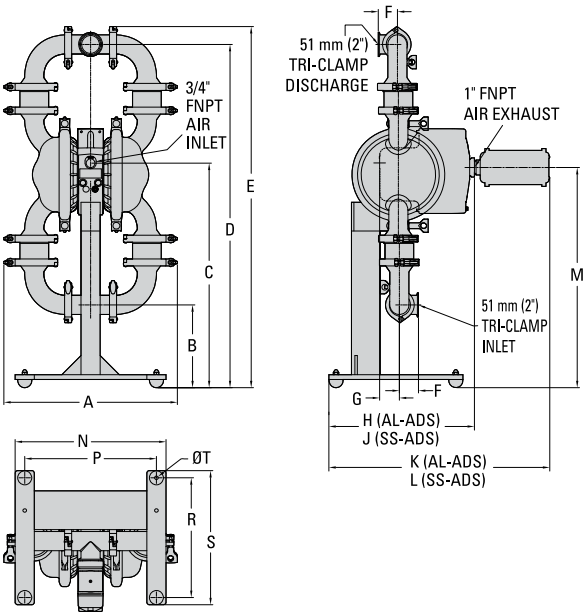

DIMENSIONS

ITEM	METRIC (mm)	STANDARD (inch)
A	460	18.1
B	220	8.6
C	595	23.4
D	910	35.8
E	958	37.7
F	51	2.0
G	52	2.1
H	386	15.2
J	380	15.0
K	586	23.1
L	580	22.9
M	584	23.0
N	400	15.8
P	349	13.8
R	318	12.5
S	356	14.0
T	ø10	ø0.4

LW0247 REV. C

BALL/MUSHROOM VALVE | FLAP VALVE ← *Click button to view Dimensional Drawing*

PS8 Saniflo™ HS, Swivel Stand

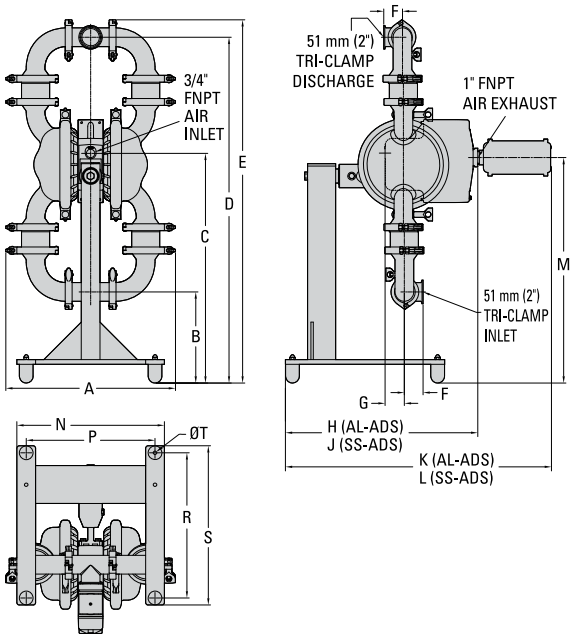

DIMENSIONS

ITEM	METRIC (mm)	STANDARD (inch)
A	460	18.1
B	247	9.7
C	623	24.5
D	938	36.9
E	985	38.8
F	51	2.0
G	52	2.1
H	522	20.5
J	514	20.3
K	721	28.4
L	715	28.2
M	611	24.1
N	400	15.8
P	349	13.8
R	394	15.5
S	732	17.0
T	ø10	ø0.4

LW0248 REV. C

BALL/MUSHROOM VALVE | FLAP VALVE ← *Click button to view Dimensional Drawing*

WILDEN®

22069 Van Buren Street
Grand Terrace, CA 92313-5607 USA

O: +1 (909) 422-1730 F: +1 (909) 783-3440
www.psgdover.com

PERFORMANCE

PS8 SANIFLO™ HS RUBBER-FITTED

Max. Flow Rate.....575 lpm (152 gpm)
Max. Inlet Pressure .....8.6 bar (125 psig)
Max. Size Solids.....Mushroom Valve 6.4 mm (1/4")
Ball Valve 12.7 mm (1/2")
Flap Valve (compressible solids) 47.5 mm (1-7/8")
Max. Suction Lift.....4.1 m Dry (13.6')
9.0 m Wet (29.5')

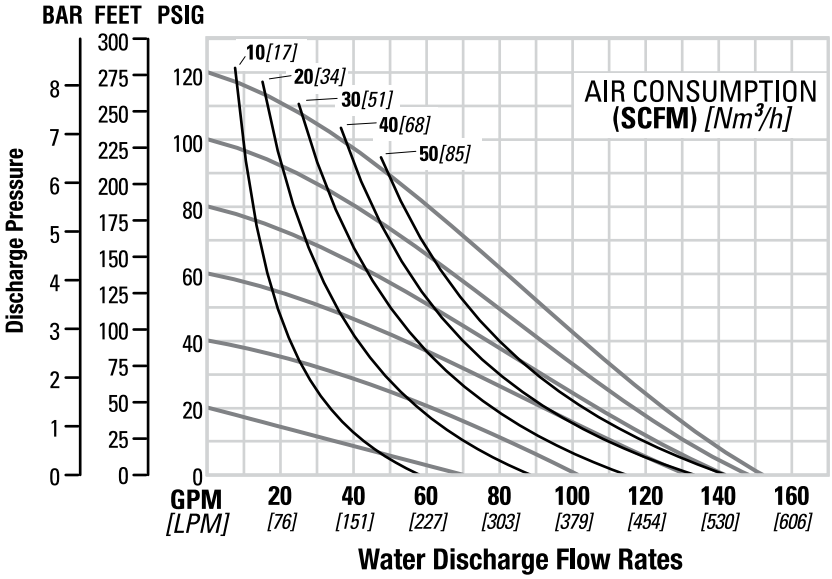

Click button to view Performance Curve ➔ RUBBER-FITTED | EZ-INSTALL TPE-FITTED

PS8 SANIFLO™ HS FULL-STROKE PTFE-FITTED

Max. Flow Rate.....534 lpm (141 gpm)
Max. Inlet Pressure .....8.6 bar (125 psig)
Max. Size Solids.....Mushroom Valve 6.4 mm (1/4")
Ball Valve 12.7 mm (1/2")
Flap Valve (compressible solids) 47.5 mm (1-7/8")
Max. Suction Lift.....3.9 m Dry (12.7')
9.0 m Wet (29.5')

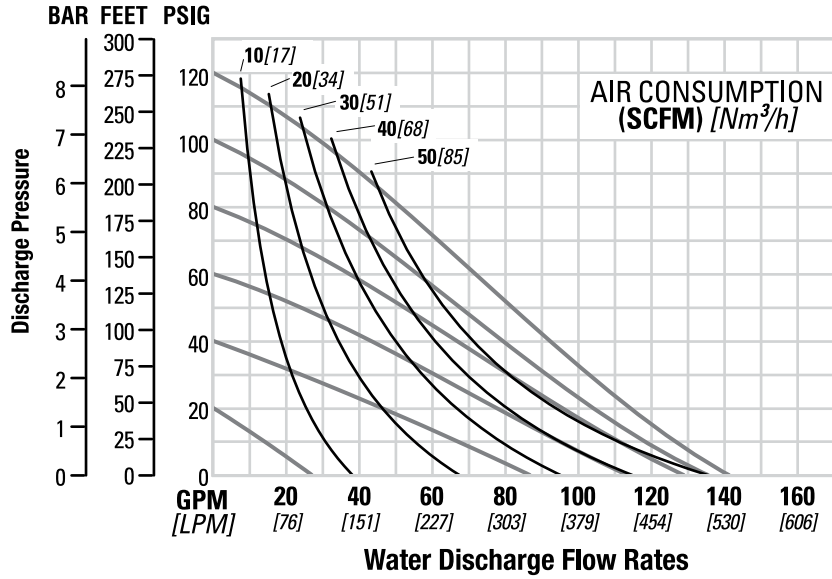

Click button to view Performance Curve ➔ FULL-STROKE PTFE-FITTED | FULL-STROKE IPD-FITTED | REDUCED-STROKE PTFE IPD-FITTED

WILDEN®

22069 Van Buren Street
Grand Terrace, CA 92313-5607 USA

O: +1 (909) 422-1730 F: +1 (909) 783-3440
www.psgdover.com

PSG a DOVER company
psgdover.com